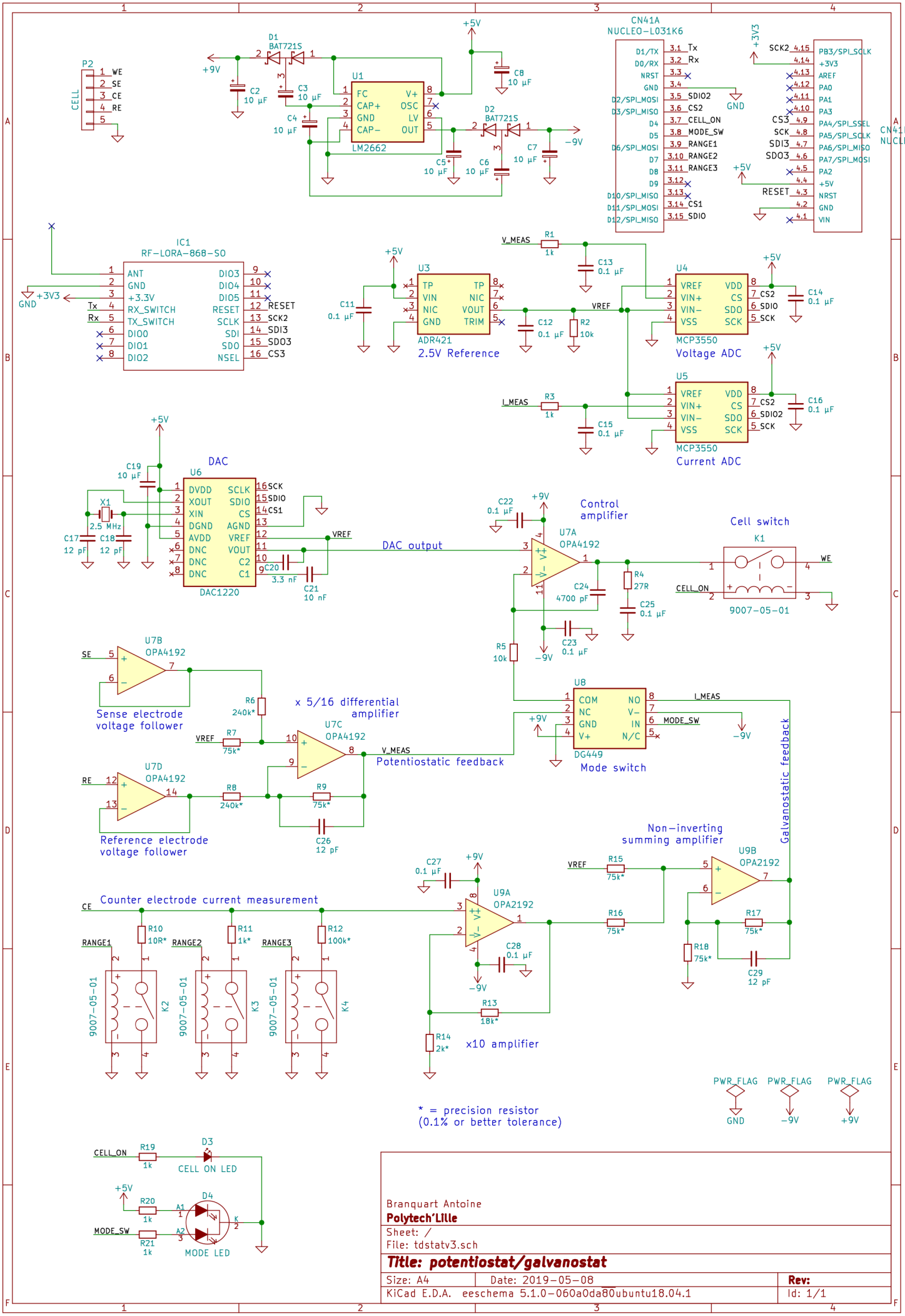

Branquart Antoine
Polytech'Lille

Sheet: /
File: tdstatv3.sch

Title: potentiostat/galvanostat

Size: A4	Date: 2019-05-08	Rev:
KiCad E.D.A. eeschema 5.1.0-060a0da80ubuntu18.04.1		Id: 1/1